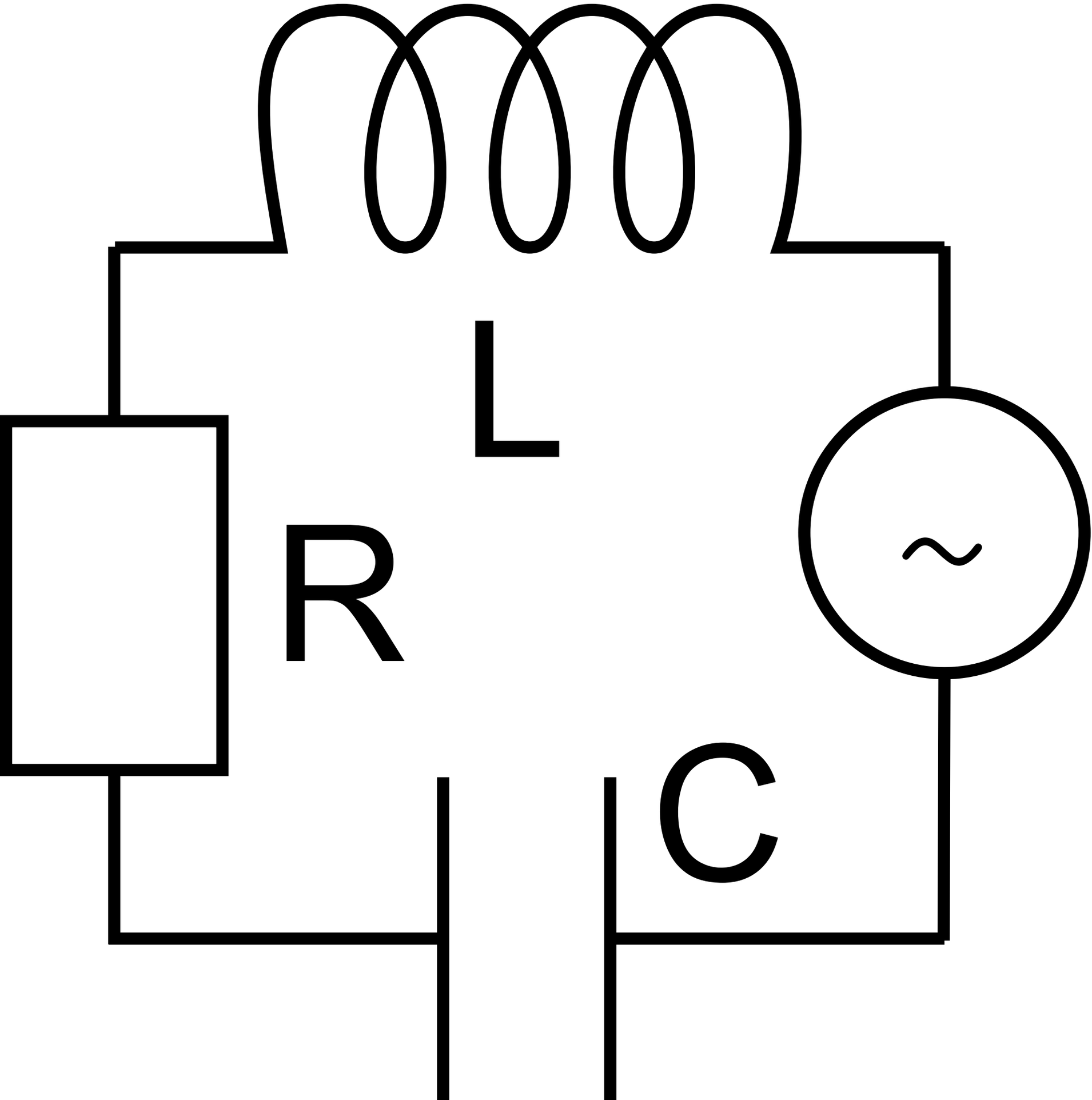
L
R
C